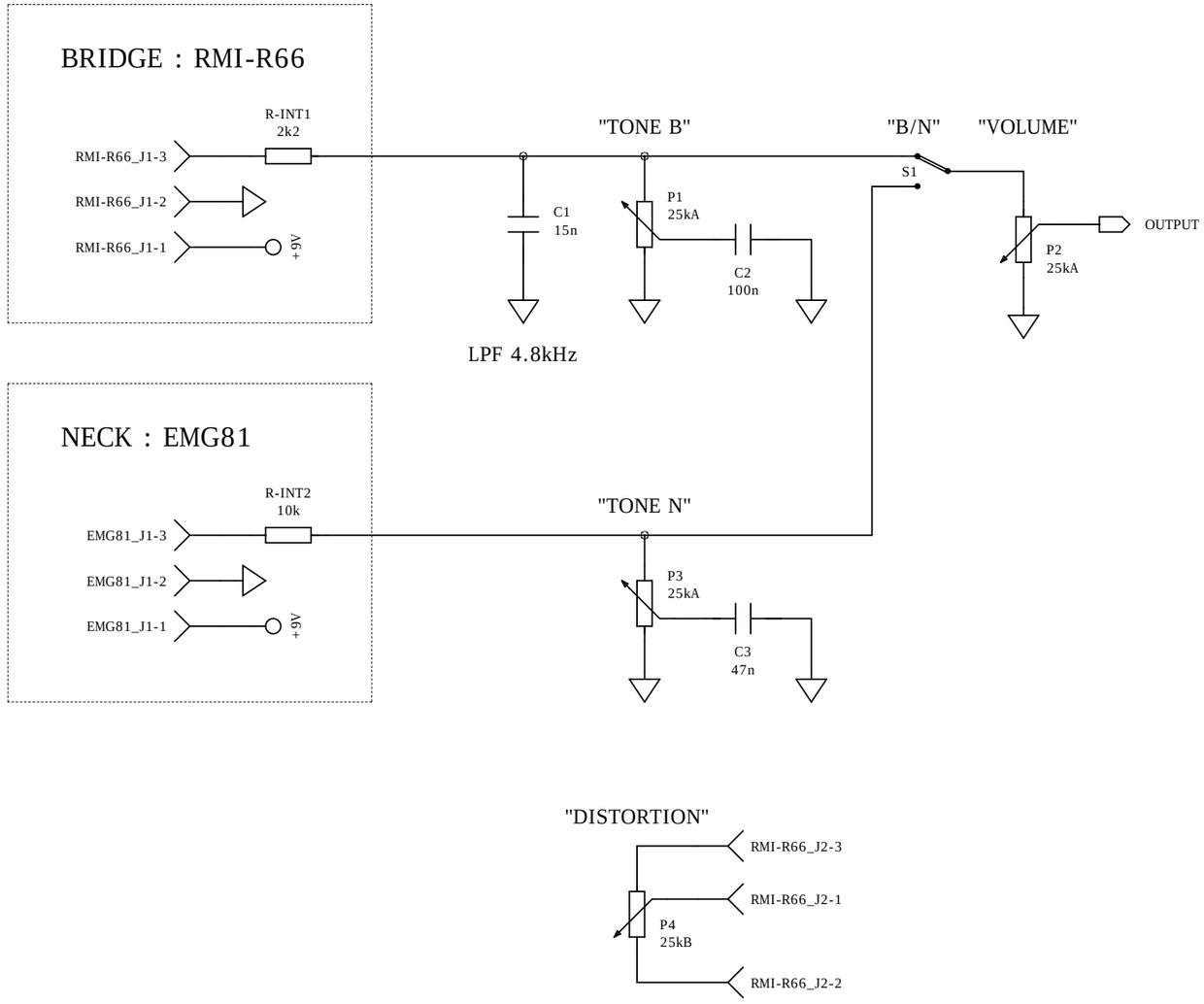

R.M.I. VGS02 V06x01 - Guitar Wiring Diagram SH1/1